MicroNote 603

Anode Gate Thyristors and High Current AC Applications

By Steve McKelvie

The common thyristor solution used in higher current ac switching is two isolated SCR's. The added hardware and packaging required to provide the needed isolated heat sinking in this configuration is a cost drawback. Triacs allow a single heat sink, but are limited by their thermal performance in current, blocking voltage, and higher frequency applications. The Microsemi AGT (Anode Gate Thyristor) device is a thyristor providing the reverse electrical switching of the SCR on a common mounting plane. The AGT effectively mirrors the operation of a matching SCR in the opposite polarity by switching in Quadrant III.

Paired SCR & AGT devices duplicate the function of a Triac without isolation at high currents and blocking voltages up to 1200V. For example, the Microsemi 050R02GOF AGT complements the popular 05002GOF SCR. Both devices are rated 50A average in a T065 package, and are available up to 1200V. A common heat sink may be used that eliminates the need for two isolated heat-sink assemblies in the ac switching circuit.

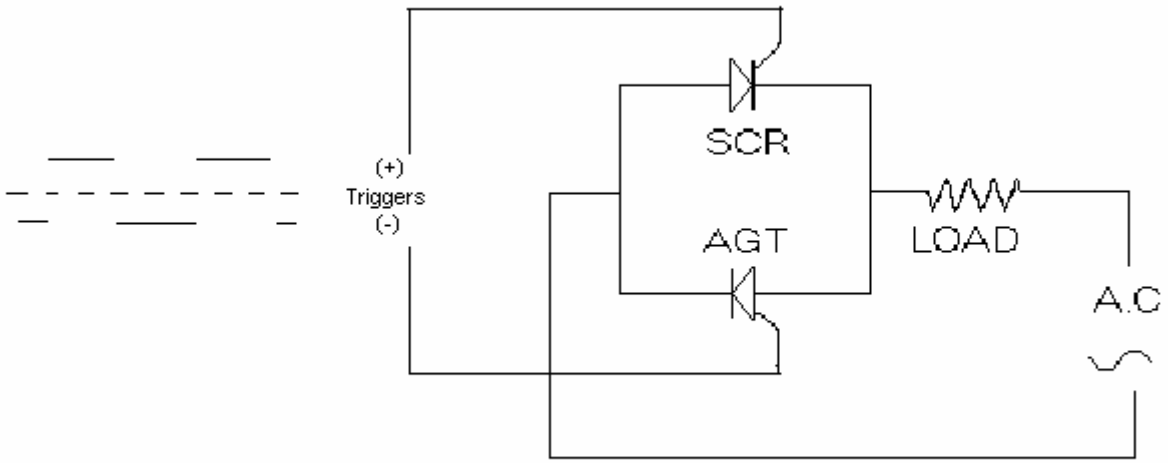

Applications include phase-controlled, zero-crossover-control, high-current battery chargers, oven controllers, motor control or simply high ac current electrical power switching. Gate triggering for non-repetitive switching applications where zero crossing & EMI is not an issue can take advantage of simple ac rectified trigger switches. Zero-crossing circuits vary with the designer's needs, sophistication, and available dc sources. The requirement for the AGT negative voltage trigger can be achieved in a positive only source or logic level through various schemes including a simple coupling transformer.

Complimentary Microsemi SCR and AGT devices should be used to ensure optimum circuit performance. Other OEM packages including single modules are feasible and can be addressed by contacting Microsemi.

Copyright © 2002

Microsemi
Colorado Division
800 Hoyt Street, Broomfield, CO. 80020, 303-469-2161, Fax: 303-466-3775