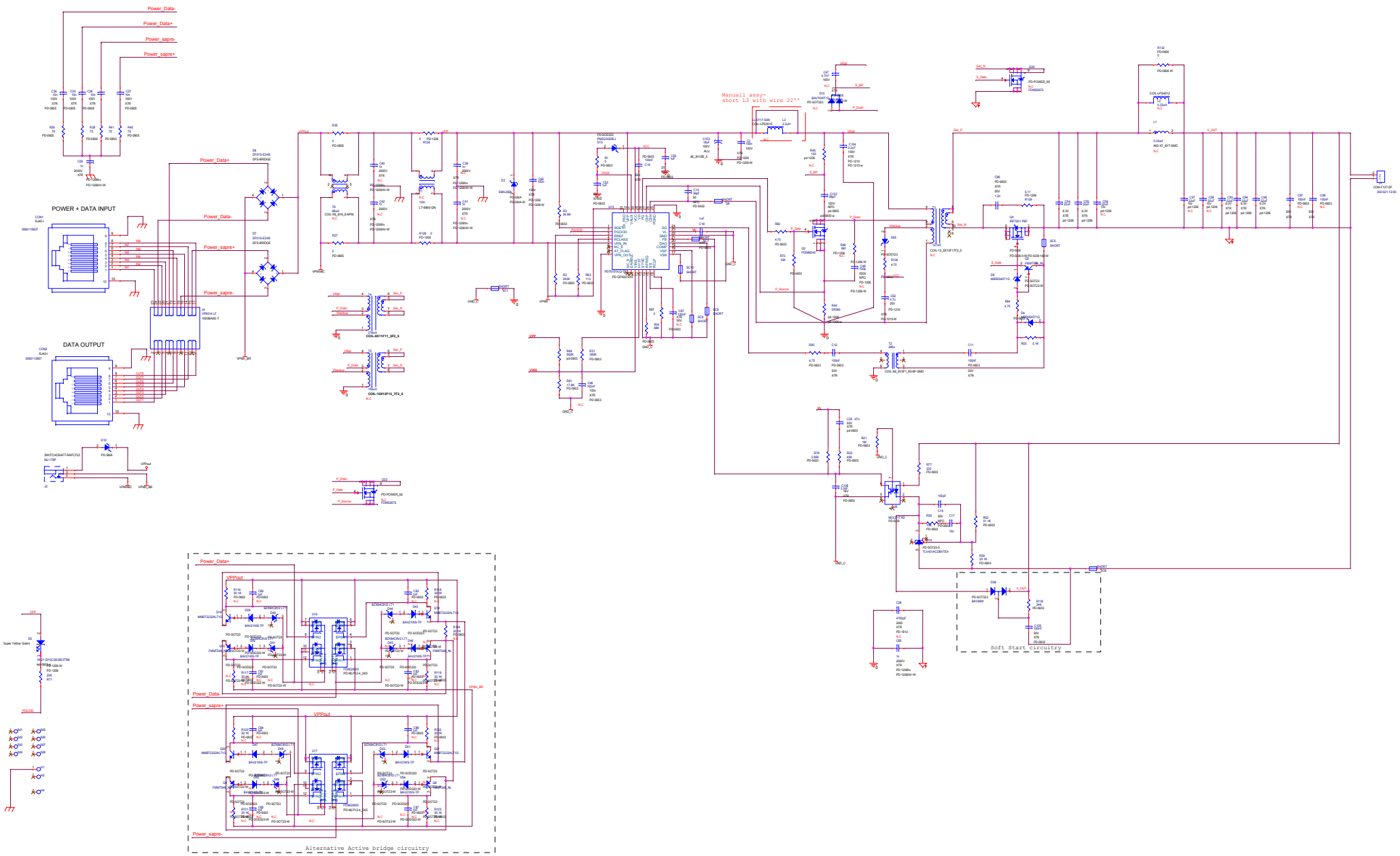

This document contains confidential information that is legally privileged of Microsemi. Any disclosure, copying or distribution of any of the information contained in this document is STRICTLY PROHIBITED

P.O.B. 7258
Nesher Ind.
Nesher Institute
Ind Zone, 45421
Israel
Tel: 972-9-7755100
Fax: 972-9-7755103

Title		Approvals		Date
MPK PD70101 3.3V/3.3W		Designed	A.S	26.05.11
Doc. No.	01-1419-E02	Drawn	A.S	26.05.11
Part. No.	PD-1419G202	Checked	D.S	26.05.11
Size	Rev 012	Approved	D.S	26.05.11
Scale		Last modif	Z.S	23.03.10

Sheet 1 of 1