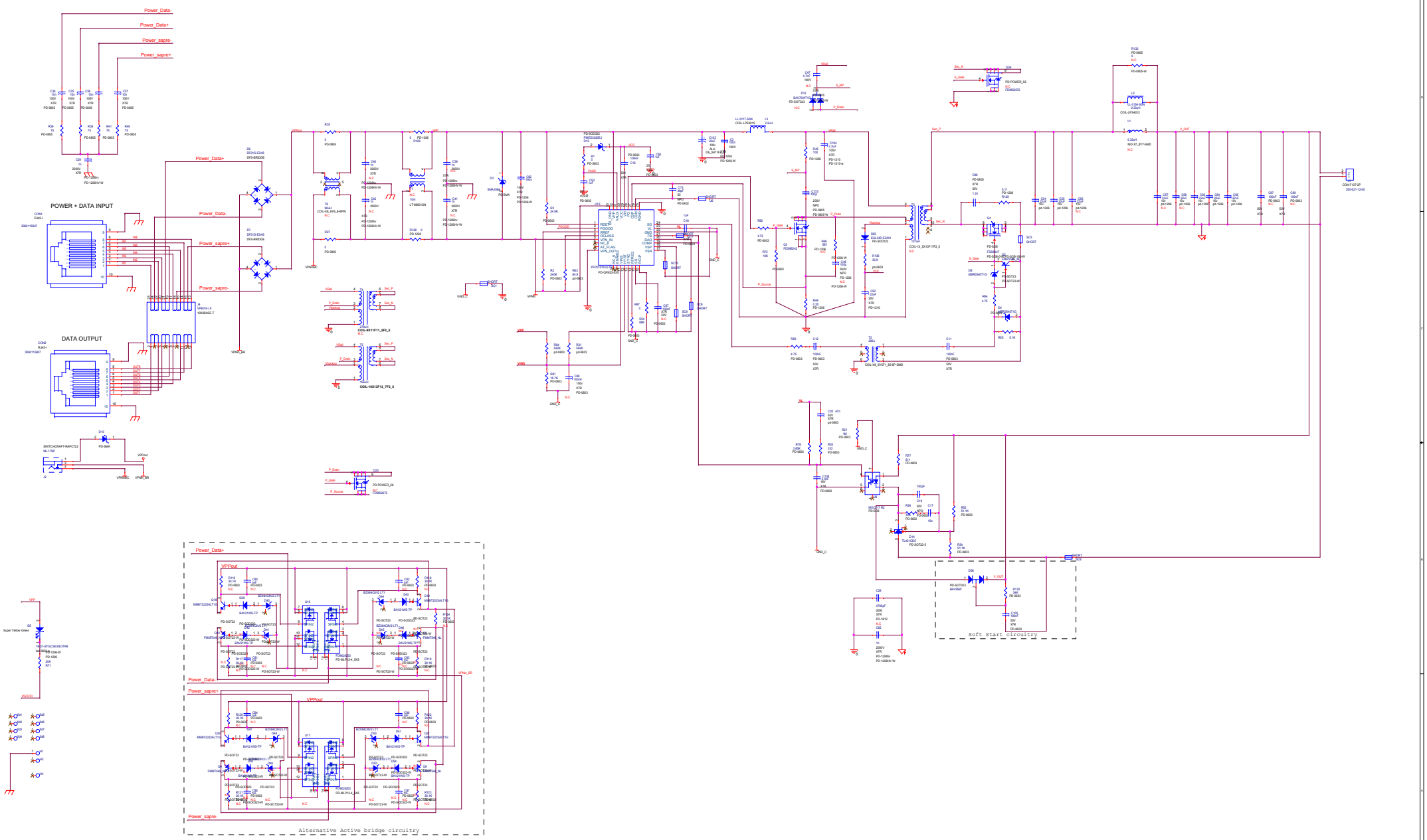

This document contains confidential information that is legally privileged of Microsoft. Any disclosure, copying or distribution of any of the information contained in this document is STRICTLY PROHIBITED

P.O.B. 7220
Hertzel 7 Ave.
Hod Hasharon
Ind Zone, 45421
Israel
Tel: 972-9-7755100
Fax: 972-9-7755150

Title		Approvals		Date
Mrk Cisco 5V/6W/90perc Fly		Designed	A.S	26.05.11
Doc. No.	01-1419-E01	Drawn	A.S	26.05.11
Part. No.	PD-1419G201	Checked	D.S	26.05.11
Size	Rev 016	Approved	D.S	26.05.11
Scale		Last modif	Z.S	15.12.14

Sheet 1 of 1