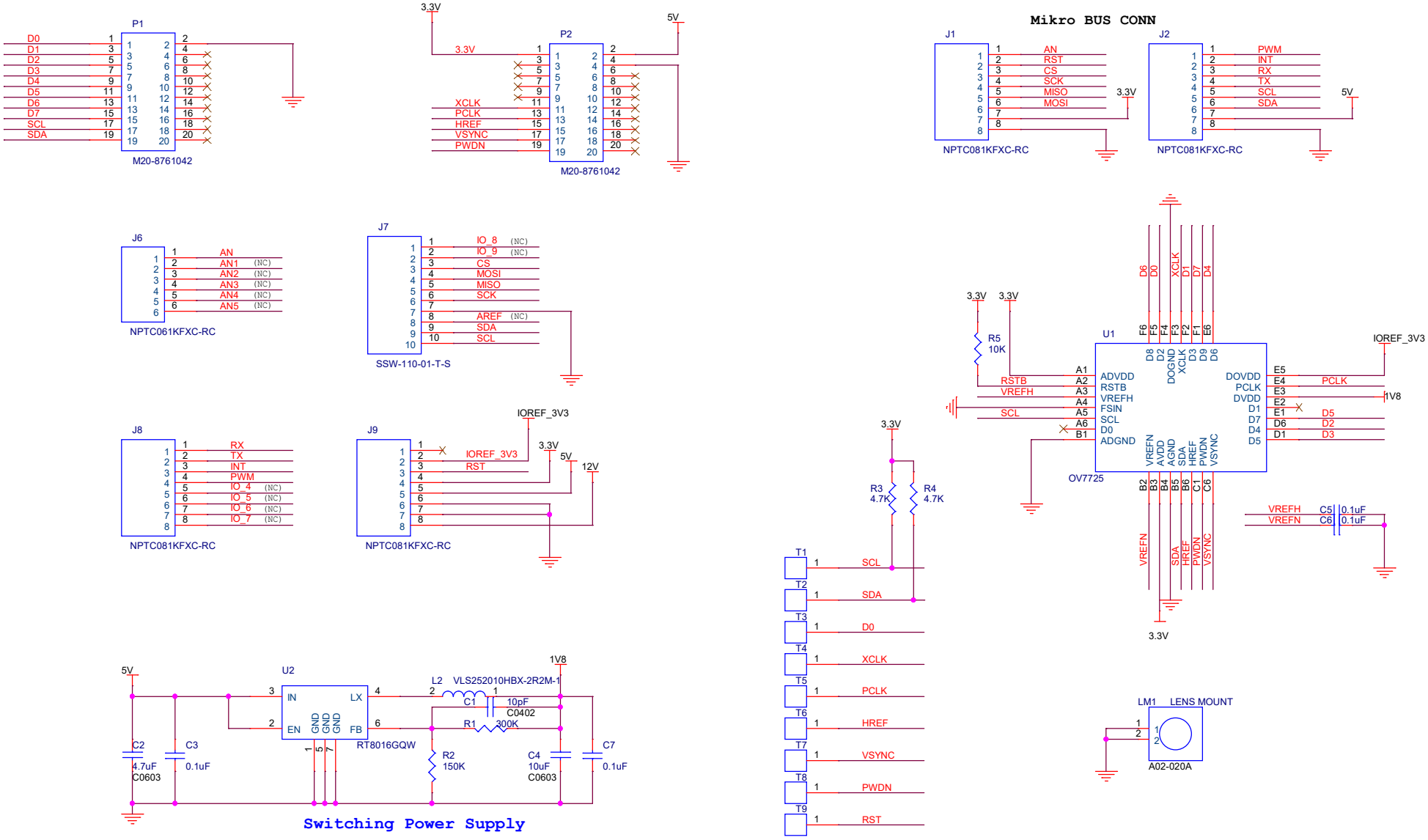

LEOPARD IMAGING INC		
Title	LI-OV7725-MICRO	
Size	Document Number OV7725/ IF	Rev 1.0
Date: Tuesday, May 07, 2019	Sheet 2 of 6	