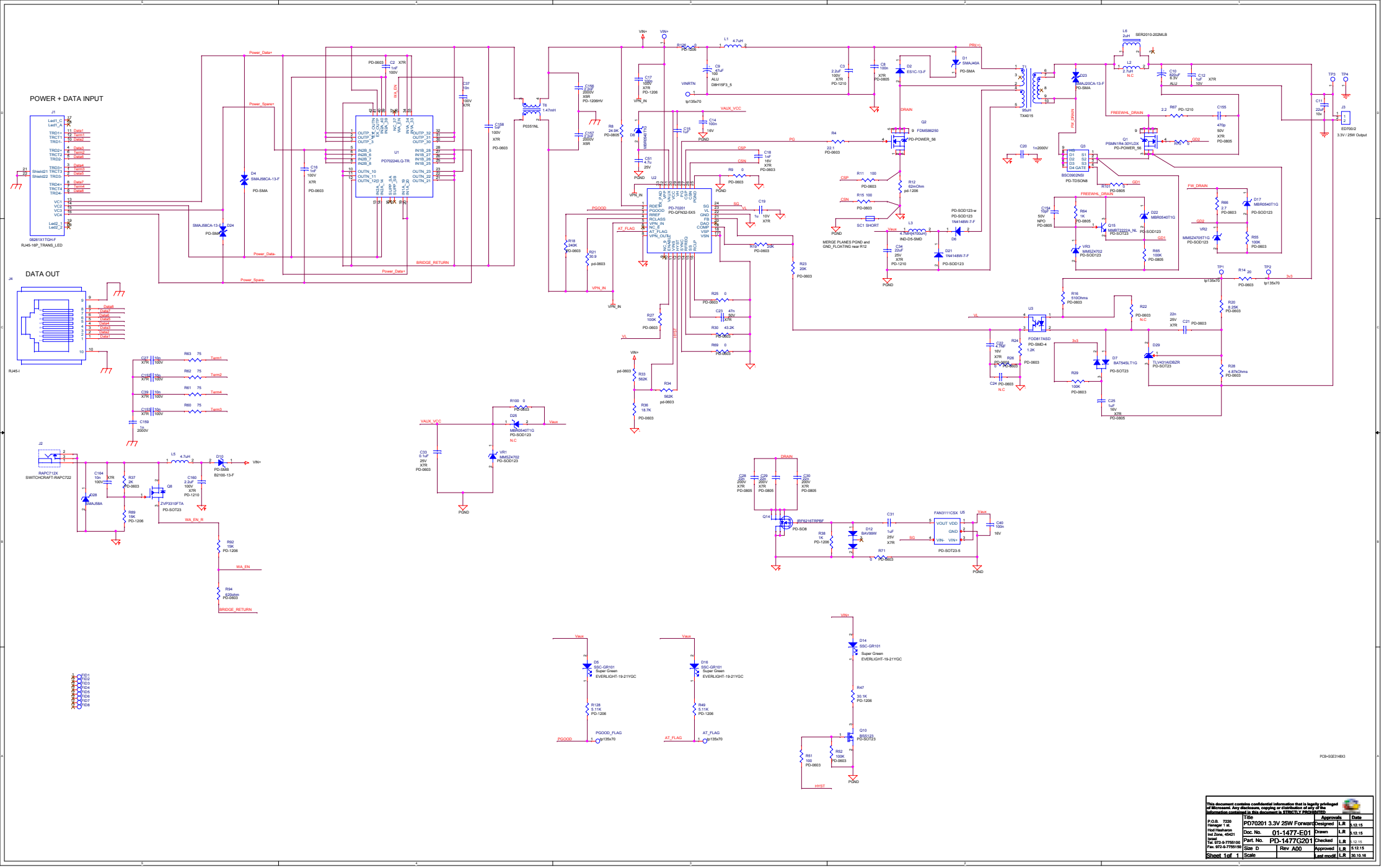
POWER + DATA INPUT
DATA OUT
J1
08261X1TGN-F
RJ45-16P_TRANS_LED
J4
RJ45-I
J2
RAPC712X
SWITCHCRAFT-RAPC722
U1
PD70224ILQ-TR
U2
PD-70201
PD-QFN32-5X5
U3
FDD8176ASD
PD-SMD-4
U5
FAN3111CSX
PD-SOT23-5
Q2
FDMS86250
PD-POWER_56
Q3
BSC0902NSI
PD-TDSON8
Q14
IRFR216TRPBF
PD-SO8
Q10
BSS123
PD-SOT23
Q8
ZVP3310FTA
PD-SOT23
T6
1.47mH
P0351NL
TX4015
95uH
L3
4.7uH/4700mA
IND-D5-SMD
L6
SER2010-202MLB
2uH
N.C
D1
SMAJ40A
PD-SMA
D2
ES1C-13-F
D4
SMAJ58CA-13-F
PD-SMA
D8
1N4148W-7-F
PD-SOD123
D21
1N4148W-7-F
PD-SOD123
D22
MBR0540T1G
PD-SOD123
D17
MBR0540T1G
PD-SOD123
D7
BAT54SLT1G
PD-SOT23
D29
TLV431AIDBZR
PD-SOT23
D10
PD-SMB
B2100-13-F
D12
BAV99W
D14
SSC-GR101
Super Green
EVERLIGHT-19-21YGC
D5
SSC-GR101
Super Green
EVERLIGHT-19-21YGC
D16
SSC-GR101
Super Green
EVERLIGHT-19-21YGC
D25
MBR0540T1G
PD-SOD123
N.C
VR1
MMSZ4702
PD-SOD123
VR2
MMSZ4705T1G
PD-SOD123
VR3
MMSZ4702
PD-SOD123
Q15
MMBT2222A_NL
PD-SOT23
Q1
PSMN1R4-30YLDX
PD-POWER_56
J3
ED700/2
3.3V / 25W Output
TP1
TP2
TP3
TP4
PCB-SGE314BX3
PD70201 3.3V 25W Forward
01-1477-E01
PD-1477G201
A00
Sheet 1 of 1
This document contains confidential information that is legally privileged of Microsemi. Any disclosure, copying or distribution of any of the information contained in this document is STRICTLY PROHIBITED
P.O.B. 7220
Hamagar 1 st.
Hod Hasharon
Ind Zone, 45421
Israel
Tel. 972-9-7755100
Fax. 972-9-7755150
Title
Approvals
Date
Designed
Drawn
Checked
Approved
Last modif.
Doc. No.
Part. No.
Size D
Rev
Scale
5.12.15
30.10.16